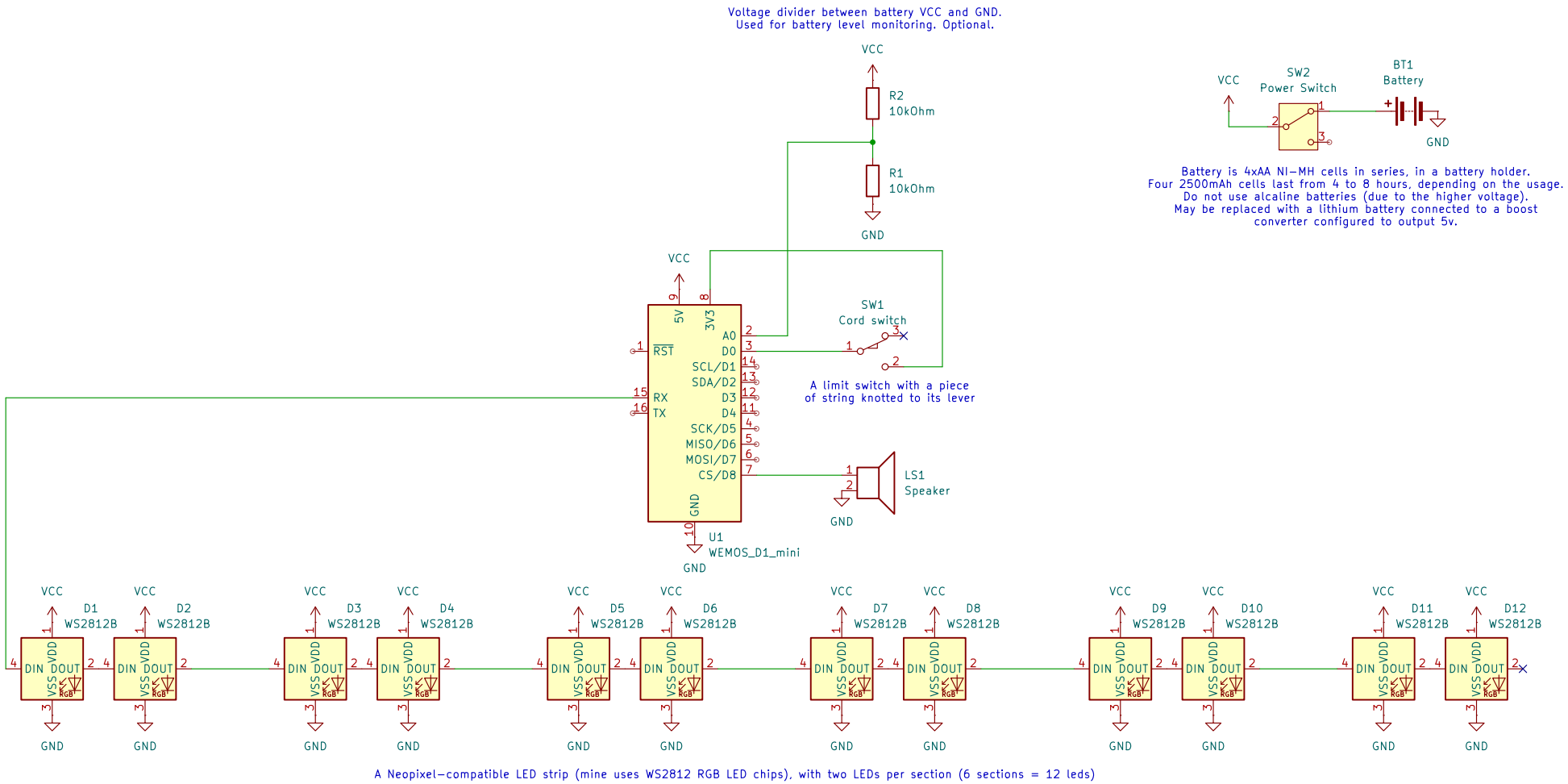

A Neopixel-compatible LED strip (mine uses WS2812 RGB LED chips), with two LEDs per section (6 sections = 12 leds)

Luna Hexagon baby game

20250701